Left Rear camera (leftward facing) position

9.040 inches to rear from origin
14.350 inches up from origin
14.960 inches to the left from origin
Yaw = 7 degrees toward front
Pitch = 21 degrees up from horizontal

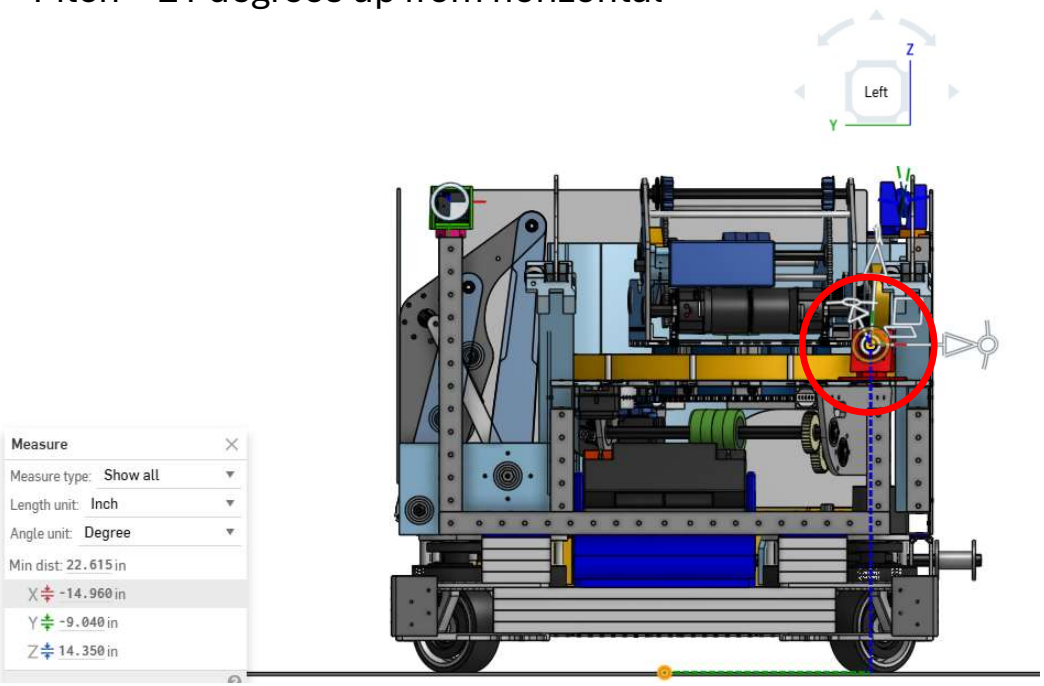

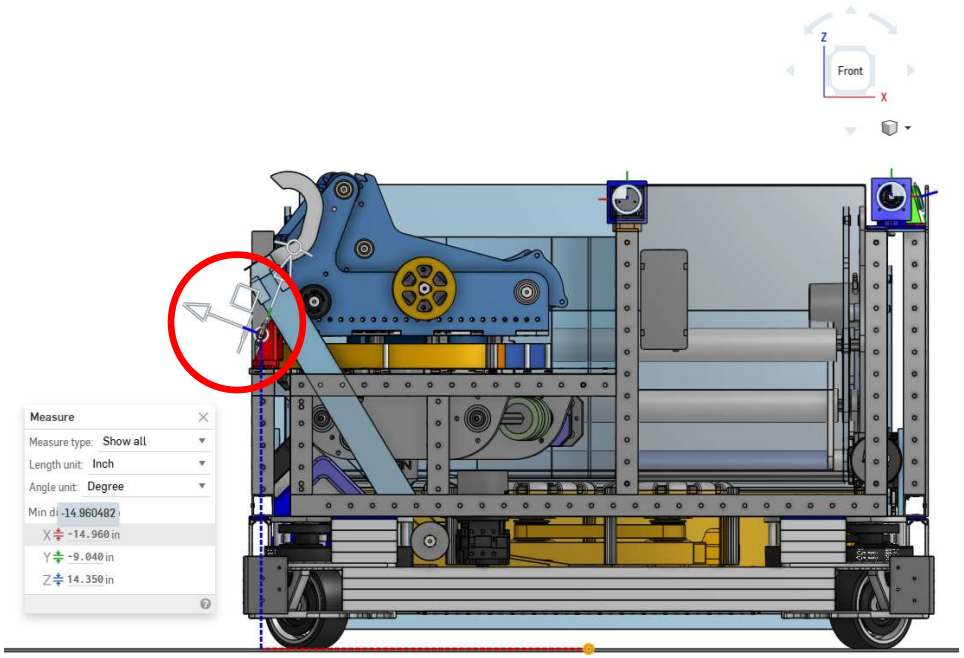

Center Rear camera (forward facing) position

10.448 inches to rear from origin
20.509 inches up from origin
1.750 inches to the right from origin
Yaw = 0 degrees (facing directly toward front)
Pitch = 10 degrees up from horizontal

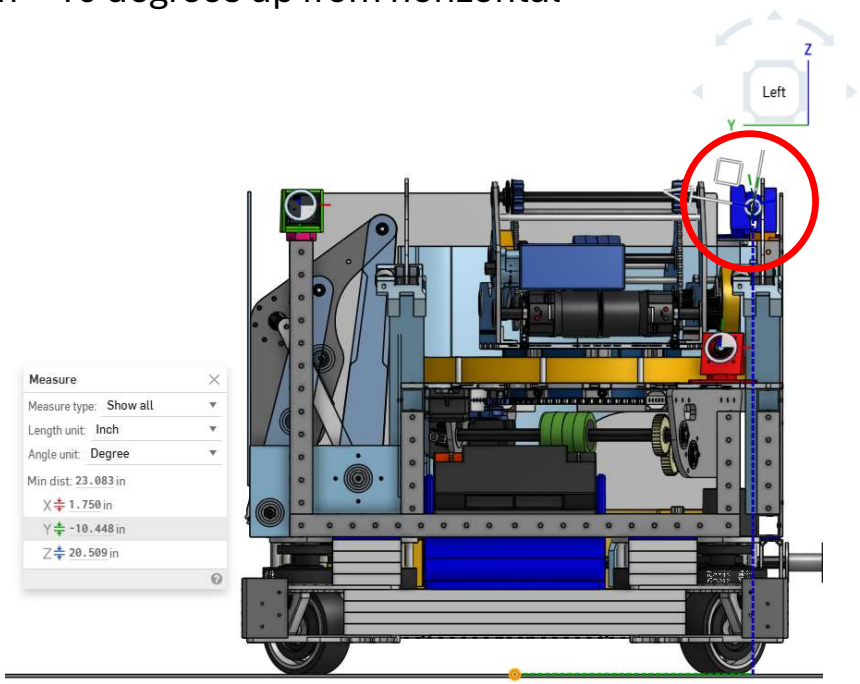

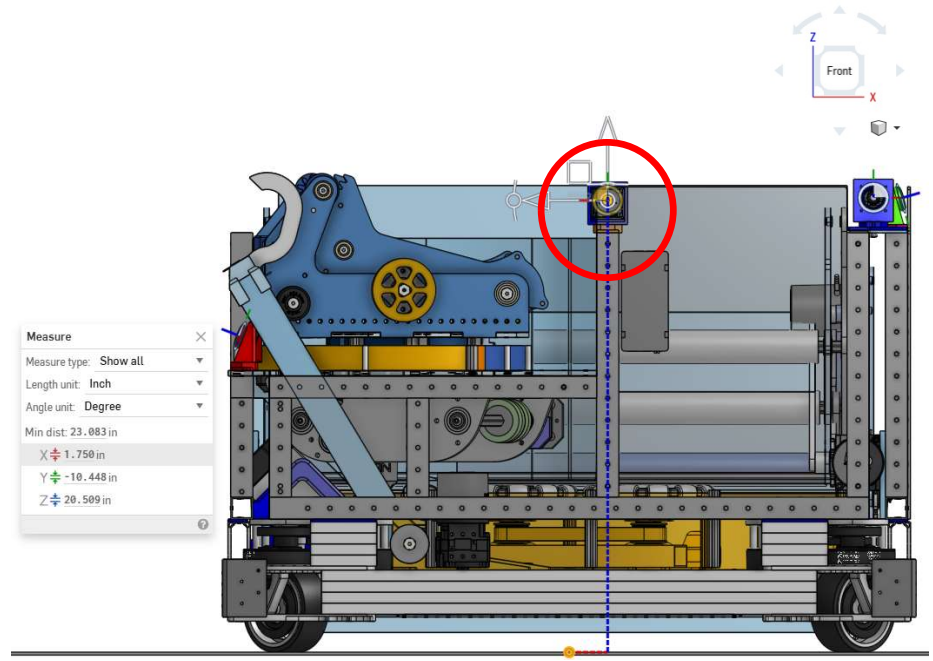

Right Rear camera (rearward facing) position

10.5 inches to rear from origin
20.634 inches up from origin
13.823 inches to the right from origin
Yaw = 180 degrees (facing directly toward rear)
Pitch = 10 degrees up from horizontal

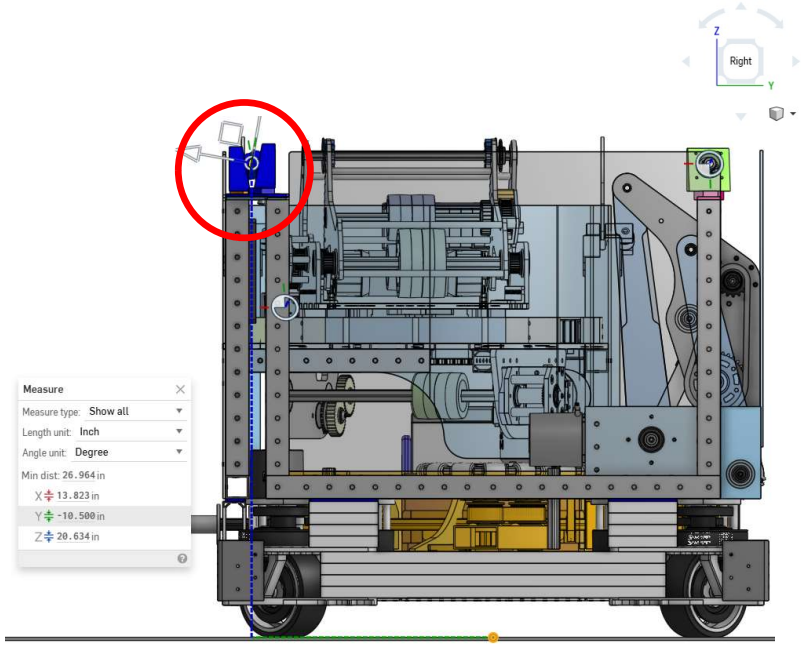

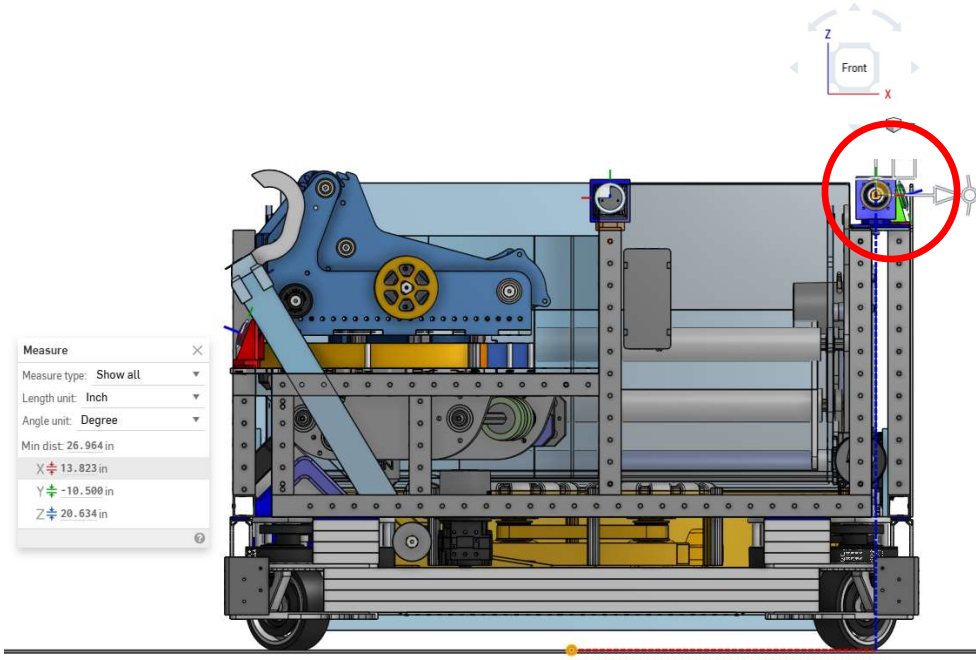

Right Front camera (rearward facing) position
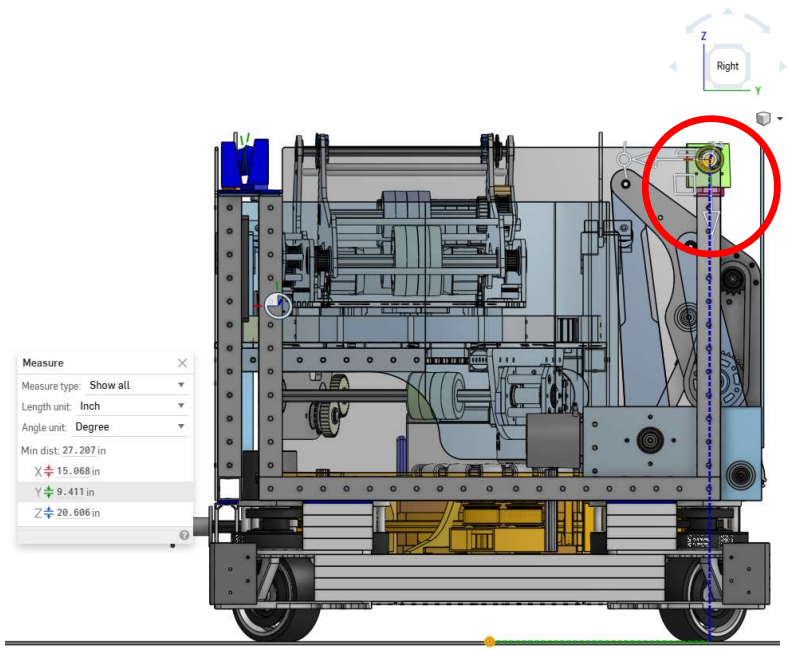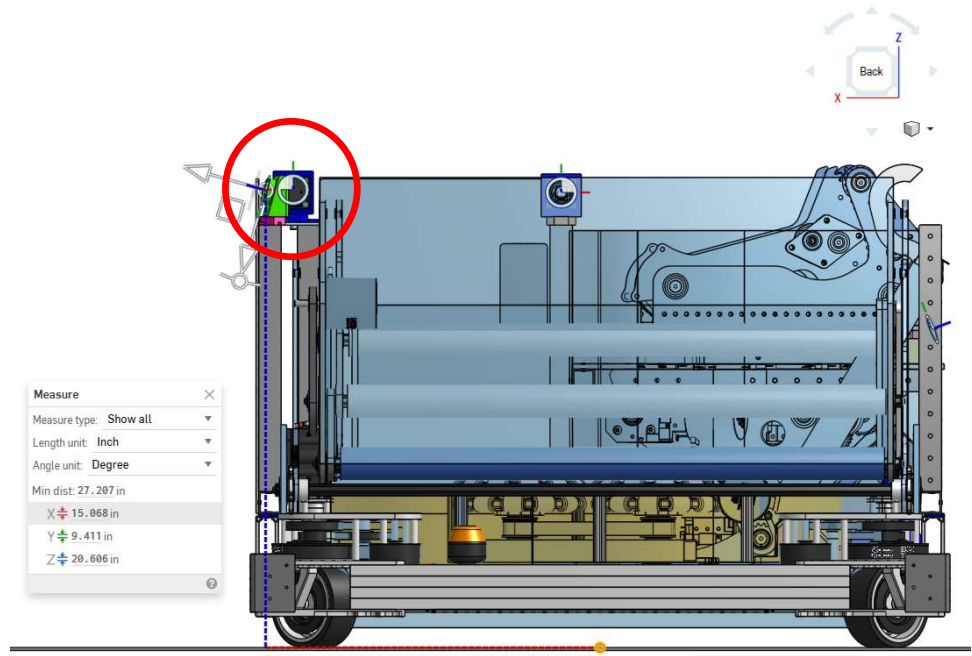
9.411 inches to front from origin
20.606 inches up from origin
15.068 inches to the right from origin
Yaw = 83 degrees (facing 7 degrees towards front from directly right)
Pitch = 16 degrees up from horizontal